Cocktail Stations

Pass-thru cocktail stations are designed with the intention of increasing productivity through teamwork.

In a normal underbar lineup, the bartender is responsible for nearly all Cocktail Life Cycle steps.

Pass-thru cocktail stations are designed to include equipment and components necessary for the server to participate in more steps of the cocktail assembly and disassembly process.

With a teamwork approach, efficiency can be doubled relative to a typical underbar lineup.

Cocktail Cycle Prep Step	Responsibility (Standard)	Responsibility (Pass-Thru Station)
Select a Glass	Bartender	Shared
Add Ice	Bartender	Shared
Add Liquor	Bartender	Bartender
Add Mix	Bartender	Shared
Garnish Cocktail	Bartender	Shared
Complete the Sale	Bartender	Bartender
Dispose Dry Waste	Bartender	Shared
Dispose Wet Waste	Bartender	Shared
Return Used Glassware	Server	Server
Wash Glassware	Bartender	Shared

With dozens of configurations, pass-thru cocktail stations can accommodate assembly steps, disassembly steps, or both.

Glastender

Glastender, Inc. • 5400 North Michigan Road • Saginaw, MI • 48604-9780
800.748.0423 • 989.752.4275 • Fax 989.752.4444 • www.glastender.com

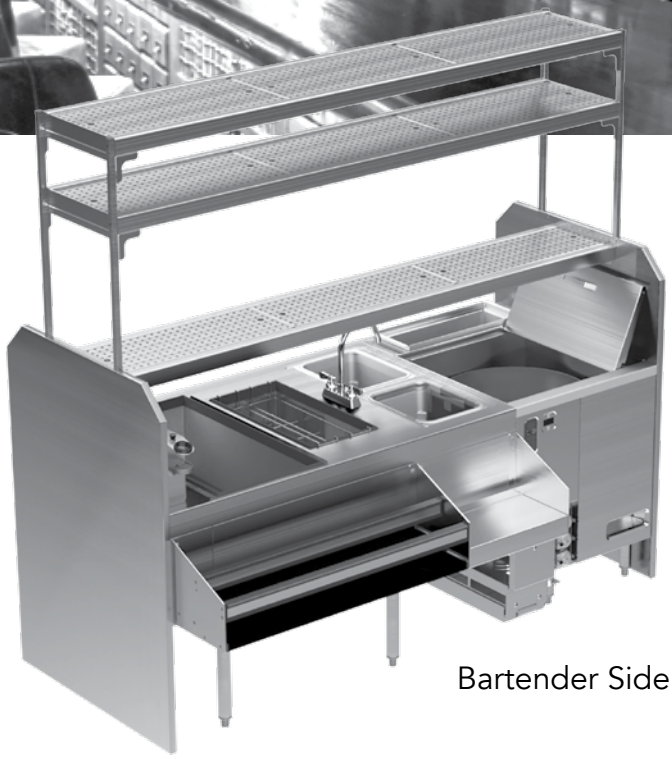

Bartender Side

Our pass-thru stations are constructed of durable, high-quality stainless steel. Cleaning takes minimal effort with all radius corners and easily removable parts.

Single and double overshelves are available as an accessory for convenient glassware storage.

Front and end finishing panels, available in stainless steel or a multitude of laminate options, give the pass-thru station a finished, cohesive look.

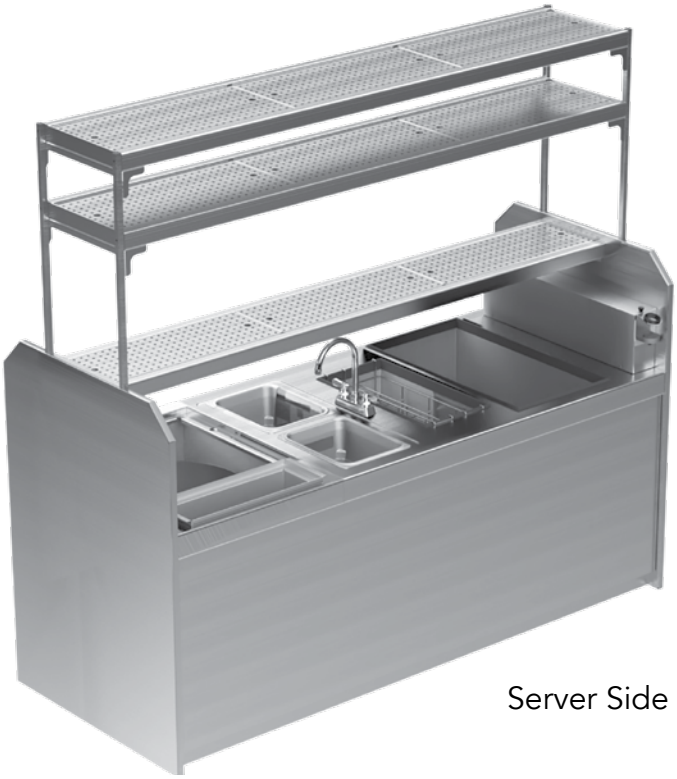

Server Side

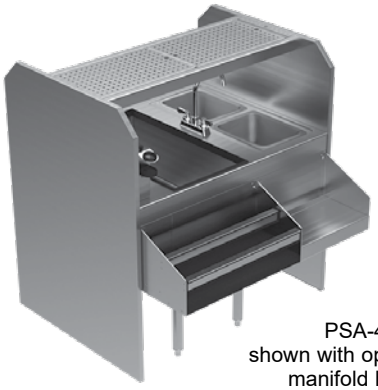

PSA-42R
shown with optional soda
manifold housing

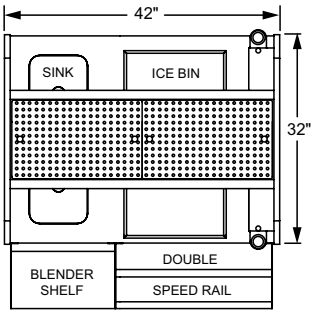

PSA-42L

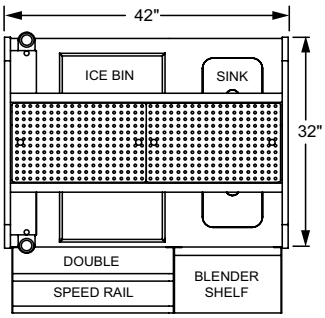

PSA-42R

PSA-42L & PSA-42R

(see PSA Spec Sheet for complete details)

The PSA-42L or R pass-thru assembly cocktail station includes the following standard features: two wet waste sinks (9-1/4″ by 10-1/2″ by 6″ deep) with strainers, gooseneck faucet, stainless steel draining tray shelf with removable perforated inserts, and one pass-thru ice bin (84 pound capacity).

Model	List	Weight	Blender Shelf/Double Speed Rail	Full Double Speed Rail	Full Single Speed Rail	Laminate Wood Panels
PSA-42L or R	$12,812	345#	$1,021	$777	$395	$1,957

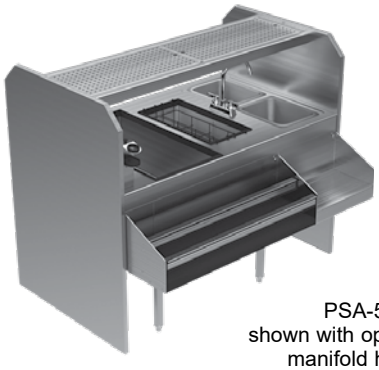

PSA-54R
shown with optional soda
manifold housing

Plan Views

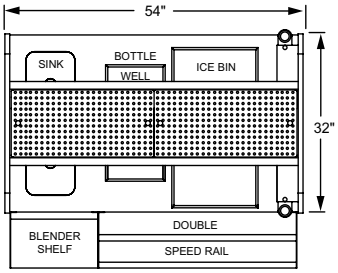

PSA-54L

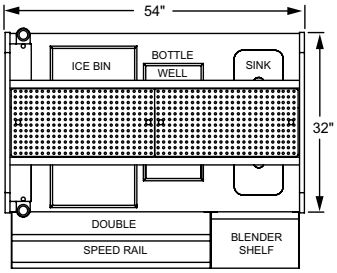

PSA-54R

PSA-54L & PSA-54R

The PSA-54L or R pass-thru assembly cocktail stations include the following standard features: two wet waste sinks (9-1/4″ by 10-1/2″ by 6″ deep) with strainers, gooseneck faucet, stainless steel draining tray shelf with removable perforated inserts, one pass-thru ice bin (84 pound capacity), and eight bottle insulated storage well.

Model	List	Weight	Blender Shelf/Double Speed Rail	Full Double Speed Rail	Full Single Speed Rail	Laminate Wood Panels
PSA-54L or R	$16,024	395#	$1,126	$1,115	$619	$2,696

*NOTE: Cocktail Stations are manufactured to order and are not returnable

Pass-Thru Assembly Cocktail Stations*

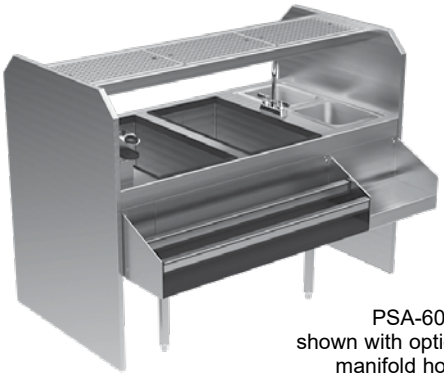

PSA-60R
shown with optional soda
manifold housing

Plan View

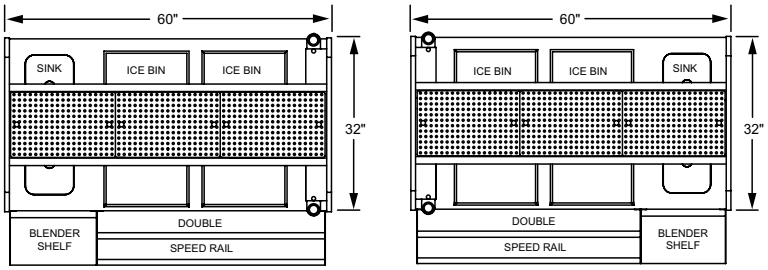

PSA-60L PSA-60R

PSA-60L & PSA-60R

(see PSA Spec Sheet for complete details)

The PSA-60L/R pass-thru assembly cocktail station includes the following standard features: two wet waste sinks (9-1/4″ by 10-1/2″ by 6″ deep) with strainers, gooseneck faucet, stainless steel draining tray shelf with removable perforated inserts, and two pass-thru ice bins (84 pound capacity each).

Model	List	Weight	Blender Shelf/Double Speed Rail	Full Double Speed Rail	Full Single Speed Rail	Laminate Wood Panels
PSA-60L/R	$16,449	435#	$1,179	$1,155	$649	$2,696

Pricing effective January 1, 2026

Pass-Thru Disassembly Cocktail Stations*

PSD-42R

Plan View

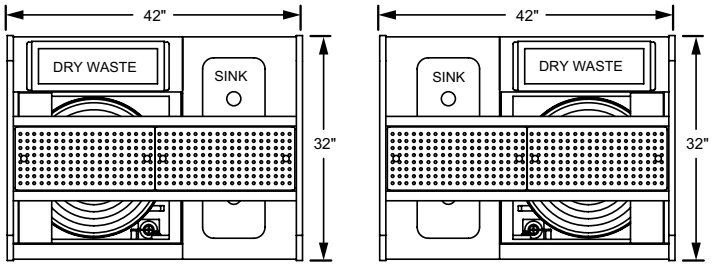

PSD-42L PSD-42R

PSD-42L & PSD-42R

(see PSD Spec Sheet for complete details)

The PSD-42L/R pass-thru disassembly cocktail station includes the following standard features: two wet waste sinks (9-1/4″ by 11-1/2″ by 6″ deep) with strainers, gooseneck faucet, server-side removable stainless steel dry waste receptacle (5 gallon capacity), stainless steel draining tray shelf with removable perforated inserts, and GW24 glasswasher with bi-fold cover.

Model	List	Weight	Laminate Wood Panels
PSD-42L/R	$27,403	540#	$1,957

*NOTE: Cocktail Stations are manufactured to order and are not returnable

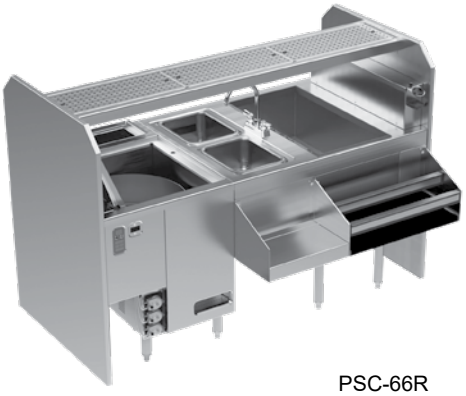

PSC-66R

Plan View

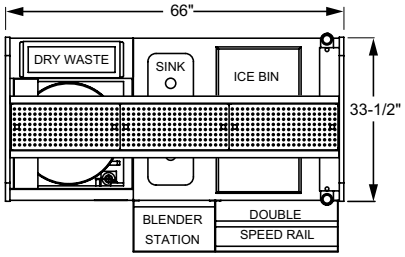

PSC-66L

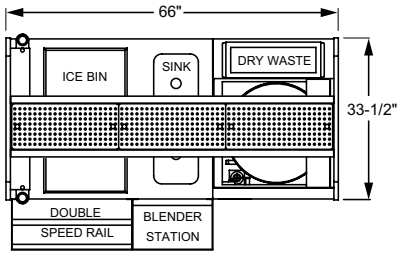

PSC-66R

PSC-66L & PSC-66R

(see PSC Spec Sheet for complete details)

The PSC-66L/R pass-thru complete cocktail station includes the following standard features: pass thru ice bin (84lb capacity), two wet waste waste sinks (9-1/4″ by 11-1/2″ by 6″ deep bowls) with sink strainers, gooseneck faucet, server-side removable stainless steel dry waste receptacle (5 gallon capacity), stainless steel draining tray shelf with removable perforated inserts, and GW24 glasswasher with bi-fold cover.

Model	List	Weight	Blender Shelf/Double Speed Rail	Full Double Speed Rail	Full Single Speed Rail	Laminate Wood Panels
PSC-66L/R	$32,442	570#	$1,021	$777	$395	$2,696

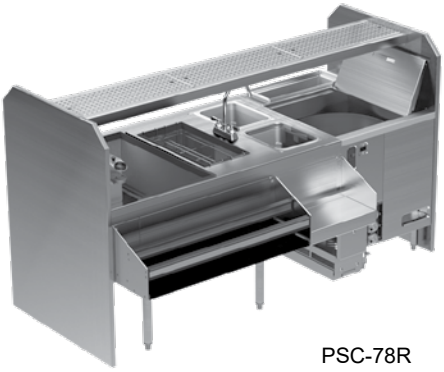

PSC-78R

Plan View

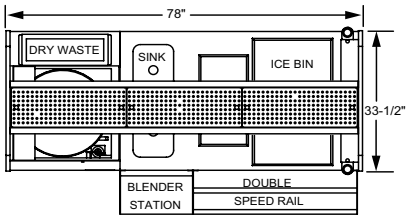

PSC-78L

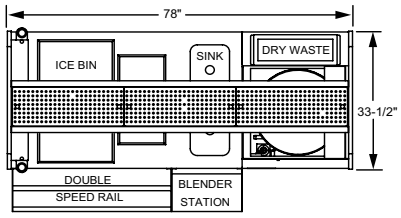

PSC-78R

PSC-78L & PSC-78R

The PSC-78L/R pass-thru complete cocktail station includes the following standard features: pass thru ice bin (84lb capacity), two wet waste waste sinks (9-1/4″ by 11-1/2″ by 6″ deep bowls) with sink strainers, gooseneck faucet, server-side removable stainless steel dry waste receptacle (5 gallon capacity), stainless steel draining tray shelf with removable perforated inserts, GW24 glasswasher with bi-fold cover, and eight bottle insulated storage well

Model	List	Weight	Blender Shelf/Double Speed Rail	Full Double Speed Rail	Full Single Speed Rail	Laminate Wood Panels
PSC-78L/R	$35,192	750#	$1,126	$1,115	$619	$2,696

*NOTE: Cocktail Stations are manufactured to order and are not returnable

Accessories

Model	Description	List	Weight	PSA-42	PSA-54	PSA-60	PSD-42	PSC-66	PSC-78
Overshelves									
(Mounts to end panels of station - brackets included)									
SOS/SS-42	42″ stainless steel single overshelf	$1,901	53#	x			x		
SOS/SS-54	54″ stainless steel single overshelf	$2,031	68#		x				
SOS/SS-60	60″ stainless steel single overshelf	$2,170	75#			x			
SOS/SS-66	66″ stainless steel single overshelf	$2,236	83#					x	
SOS/SS-78	78″ stainless steel single overshelf	$2,361	98#						x
DOS/SS-42	42″ stainless steel double overshelf	$2,907	98#	x			x		
DOS/SS-54	54″ stainless steel double overshelf	$3,169	126#		x				
DOS/SS-60	60″ stainless steel double overshelf	$3,446	140#			x			
DOS/SS-66	66″ stainless steel double overshelf	$3,579	154#					x	
DOS/SS-78	78″ stainless steel double overshelf	$3,829	182#						x
Clip-on Garnish Dispenser									
(Clips to tray shelf on bartender or server side)									
CCD/T	Garnish dispenser, clip-on to tray shelf	$300	4#	x	x	x		x	x
Ice Bin Accessories									
03000509	Sneeze guard for 32″ deep stations	$334	15#	x	x	x		x	x
IBD-H-CS32	Ice bin divider, half, for 32″ deep station	$189	4#	x	x	x		x	x
02006635	Sliding cover	$292	12#	x	x	x		x	x
Clip-on Dry Waste Receptacle									
(Clips to front panel on cocktail server side of station)									
CDRY	Clip-on dry waste (stainless steel)	$922	30#	x	x	x			
Soda Gun Accommodations									
02001103	Ten circuit cold plate	$2,363	120#	x	x	x		x	x
	Soda manifold	$823	21#	x	x	x		x	x
GW24 Rotary Glasswasher Accessories									
01001500	Slide-out Chemical Bottle Rack	$870	25#				x	x	x
01001601	Rack divider, two-piece assembly	$305	7#				x	x	x

All faucets are certified low lead compliant

⚠**WARNING:** The plastic wet waste strainer included with this product can expose you to chemicals including Bisphenol A (BPA), which is known to the State of California to cause birth defects or other reproductive harm. For more information, go to www.P65Warnings.ca.gov.
Warning applies to State of California only. Part #03000483

*NOTE: Cocktail Stations are manufactured to order and are not returnable